# Axelent Doors

## Sliding door, 2-step with upper rail

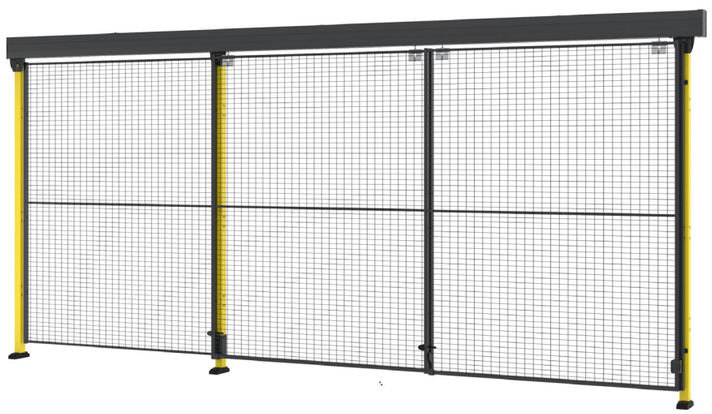

D23-XXX300L

D23-XXX300R

D43-XXX300L

D43-XXX300R

AXELENT

**AXELENT AB**

WWW.AXELENT.COM

C-0004228-01, C-0005878-01, C-0004751-01, C-0004754-01
|V2303_D23_D43-XXX300L,R_manual

# D23-XXX300, D43-XXX300

## Left

**B23-3D** x 1

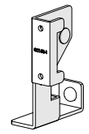
G2152-1 x 1

S6SS-M8.12 x 2

## Right

**B23-3B** x 1

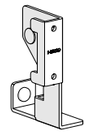
G2151-1 x 1

S6SS-M8.12 x 2

**D3SB1-XXX/ D3SB2-XXX/** x 1

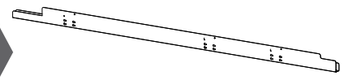

**B24-4C** x1

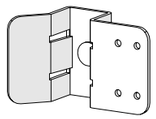
G2317-1 x 1

30-9901 x 2

RTS-B10.13ZNB x 3

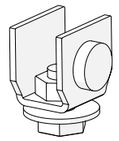
65-84010 x 2

**B23-3E** x 1

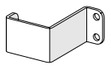
G2163 x 2

30-9901 x 6

RTS-B10.13ZNB x 3

**B20-2S** x 1

x 2

**B20-2R** x 2

G2154 x 1

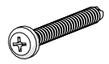
RXB-B12X50 x 1

**B00-077** x 2

G2740 x 2

MK6S-M6.8 x 2

MK6S-M6.14 x 2

10-9693 x 2

**G2388-1500-3** x 2

**B20-3K** x 4

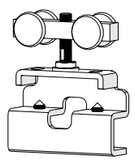

**G2382-620** x 2

**G2384** x 4

**B24-4D** x 5

G2383 x 1

SK6SS-M8.10 x 1

MK6S-M8.12 x 1

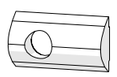
G2385 x 1

TX25

4/5/6mm

PH2

7mm

13mm

## D23-XXX300

**B20-4F**
**x 3**

| G2264 | G2279 | MC6S-M8.22ZP | MK6S-M8.12 | MK6S-M8.16 | G2385 | G2280 | G2281 |
|---|---|---|---|---|---|---|---|
| x 1 | x 1 | x 1 | x 2 | x 1 | x 2 | x 1 | x 1 |

**B23-3A**
**x 1**

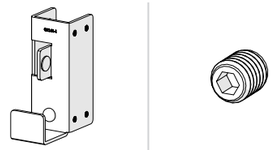

| G2161-1 | S6SS-M8.12 |
|---|---|
| x 1 | x 8 |

## D43-XXX300

**B43-4A**
**x 1**

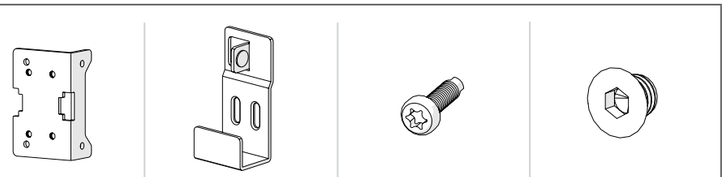

| G2537 | G2540-1 | 10-9740 | G2017-3 |
|---|---|---|---|
| x 1 | x 1 | x 2 | x 2 |

**B40-5F**
**x 3**

| G2267 | G2283 | MC6S-M8.30ZP | MK6S-M8.12 | MK6S-M8.20 | G2385 | G2284 | G2281 |
|---|---|---|---|---|---|---|---|
| x 1 | x 1 | x 1 | x 2 | x 1 | x 2 | x 1 | x 1 |

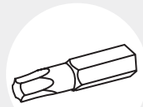

TX25

4/5/6mm

PH2

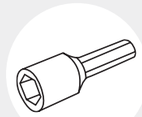

7mm

13mm

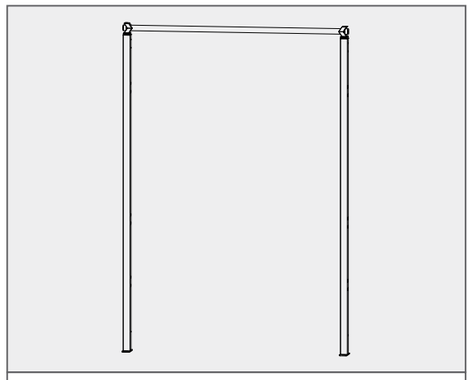

**1** Doorframe
P. 5

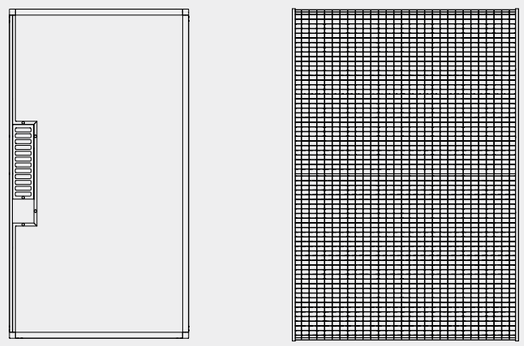

**2** Metal/Plastic/Mesh Panel
P. 8

**1500 mm** width panels are not available in sheet metal

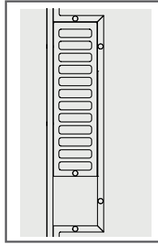

D358-XXXXXX_D359-XXXXXX_G3059-X_manual

Decor plate **G3060-XXX**

Lock plate w/o hole **G3059-X**

## Not included

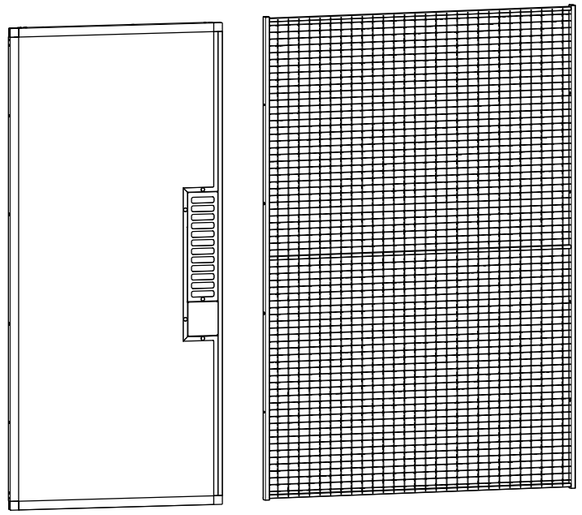

Mesh panel, Sheet metal, Plastic panel, Quick fittings

T11-3-XXX04 Manual

Cover strip for metal/plastic panel

B00-002 B00-050

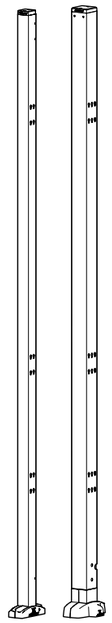

Post 50x50/70x70

## 1

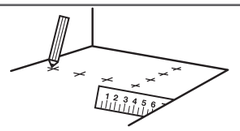

X-Guard assembly instruction achor bolts

X-Guard_Classic_manual

D23-XXX300L/R

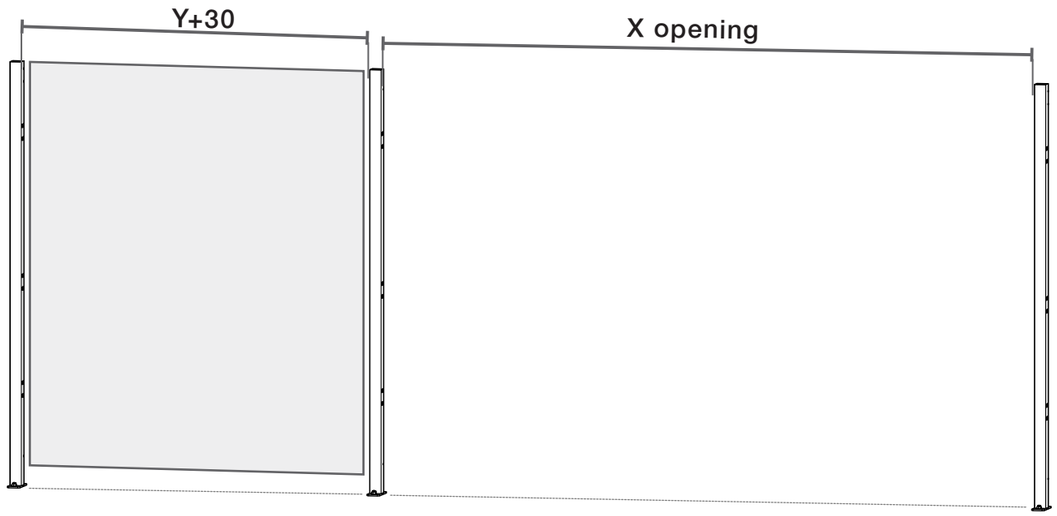


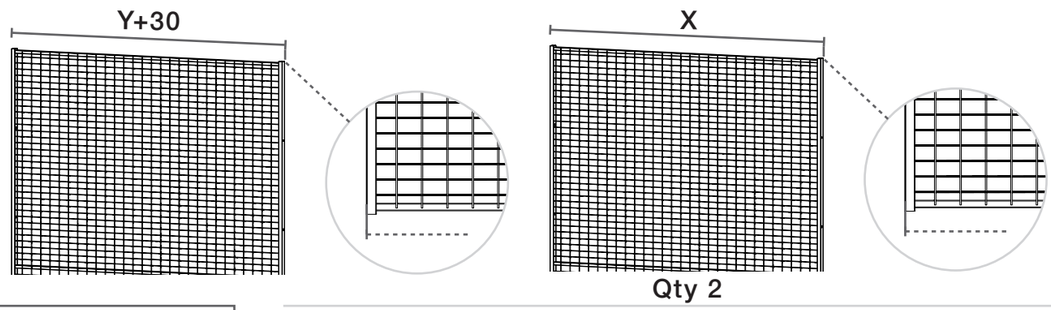


D43-XXX300L/R

X-Guard_Premium_70x70_assembly_guide

## 2

D23-XXX300L/R

B20-4F

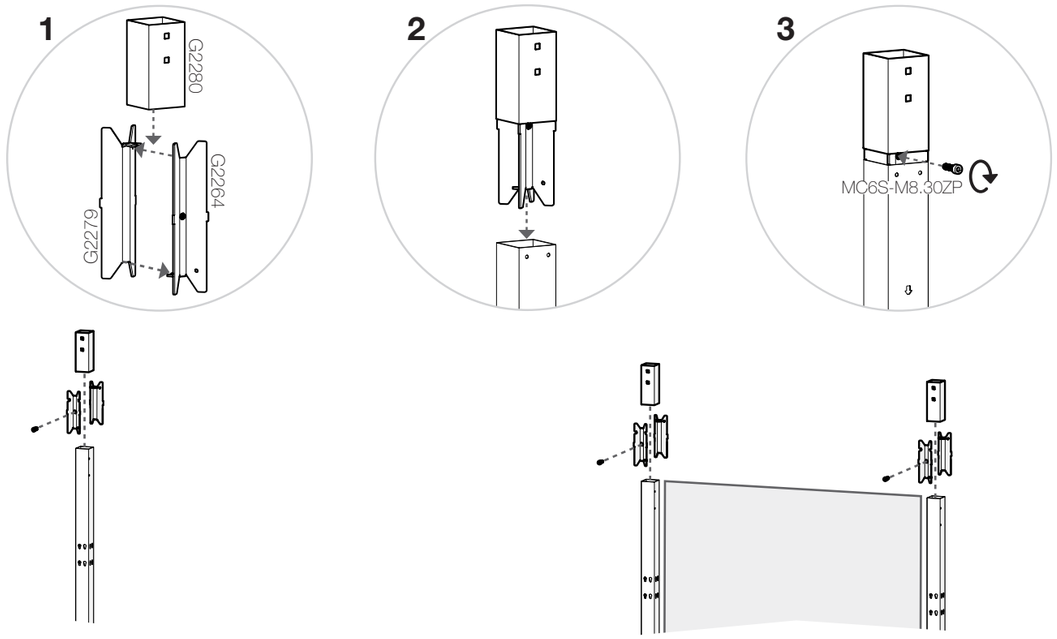


D43-XXX300L/R

B40-5F

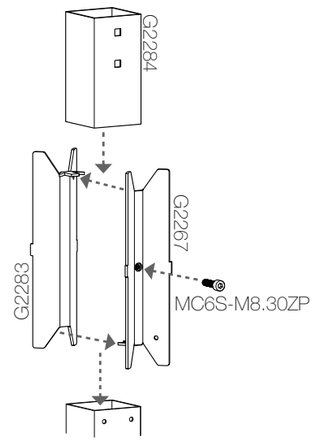

## 3

5mm

D23-XXX300L/R
D43-XXX300L/R

B20-4F / B40-5F

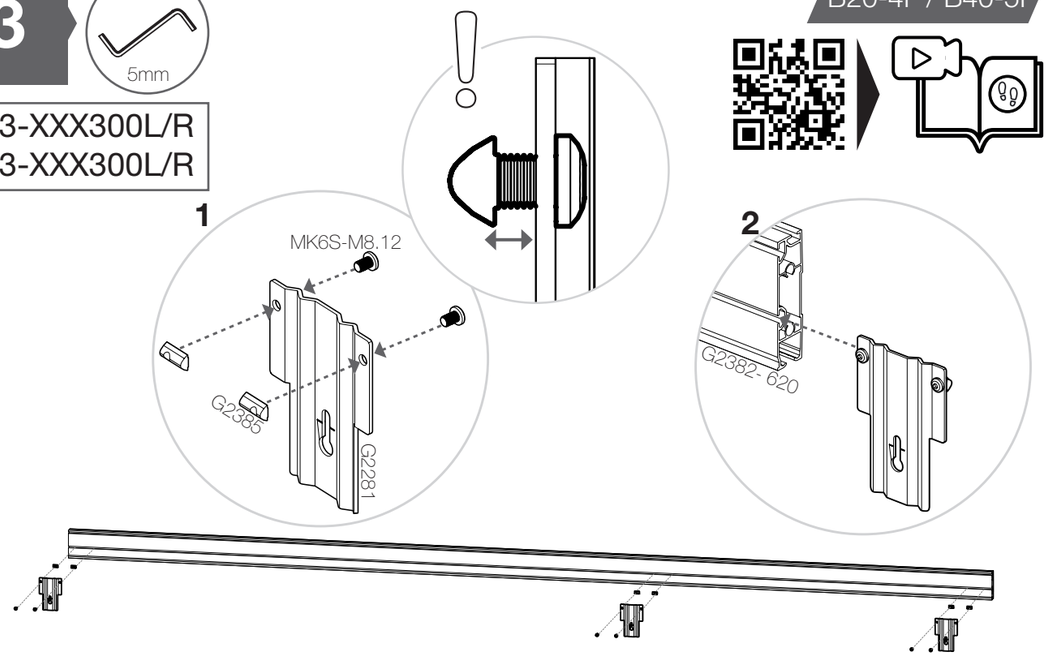


## 5

5mm

D23-XXX300L/R
D43-XXX300L/R

B24-4D

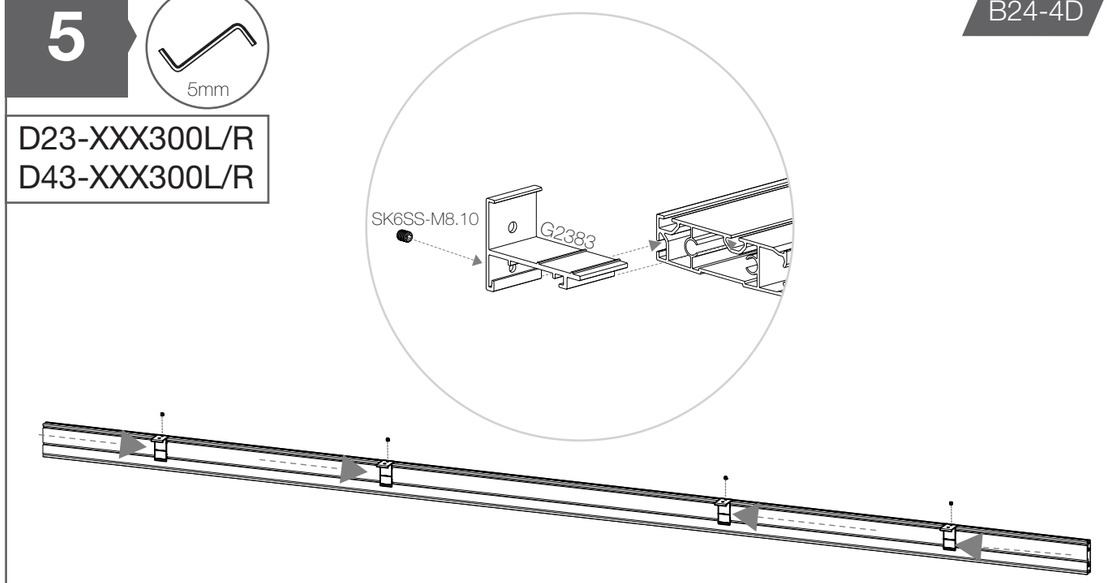


## 4

5mm

D23-XXX300L/R
D43-XXX300L/R

B20-4F / B40-5F

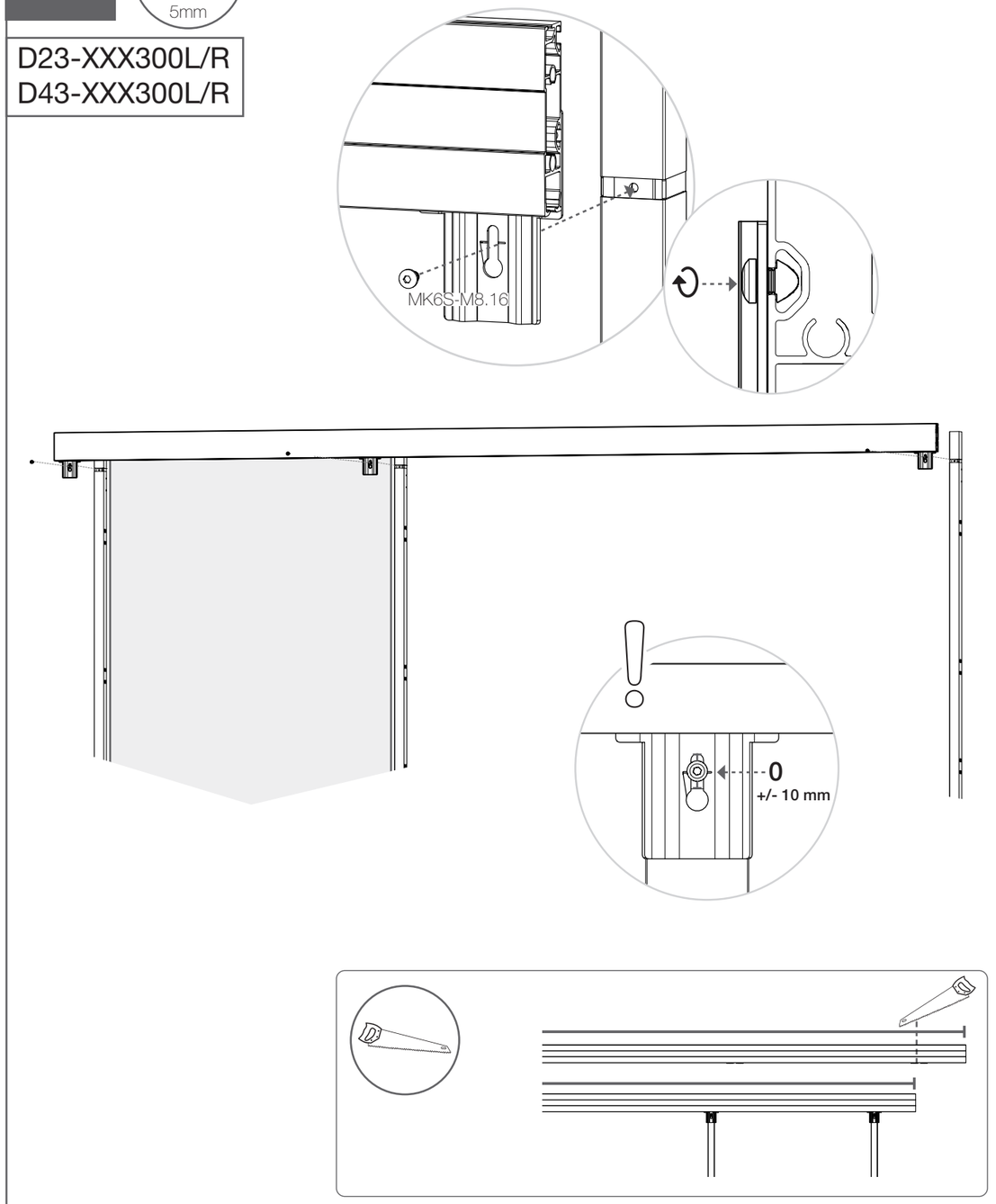

# 6

5mm

B24-4D

D23-XXX300L/R
D43-XXX300L/R

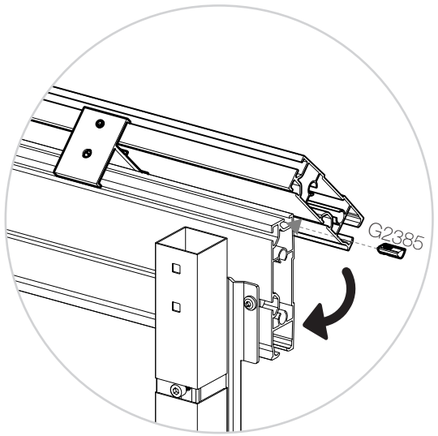


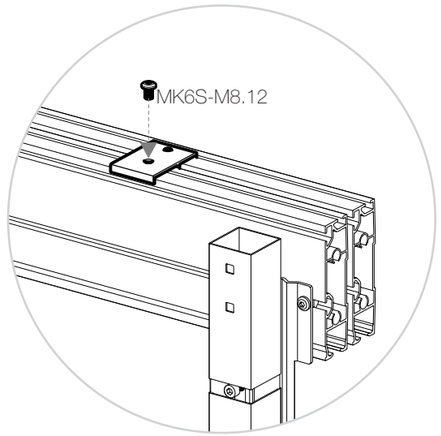


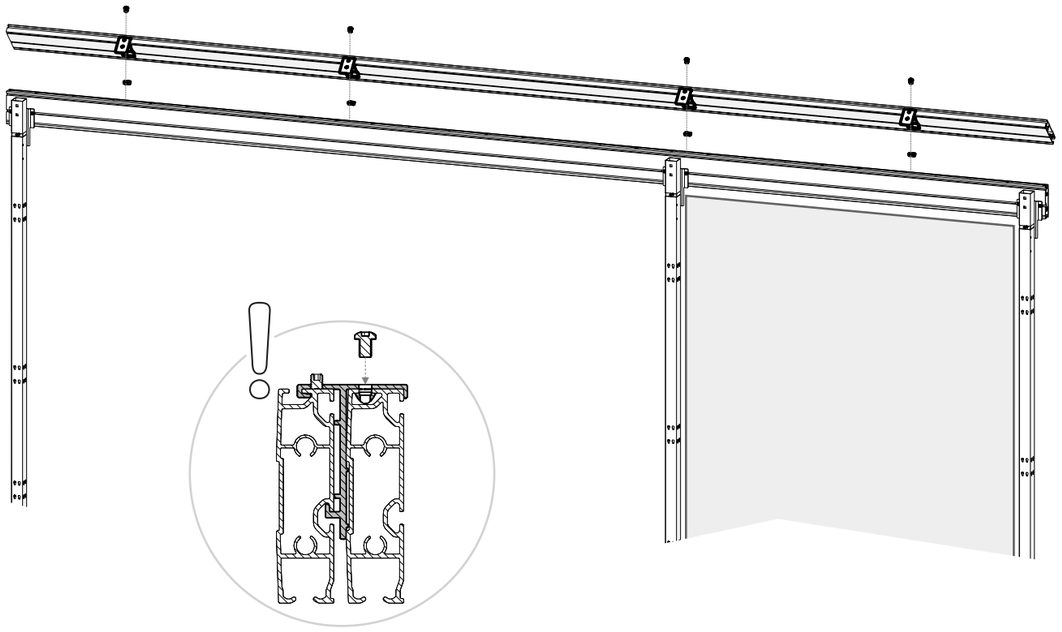

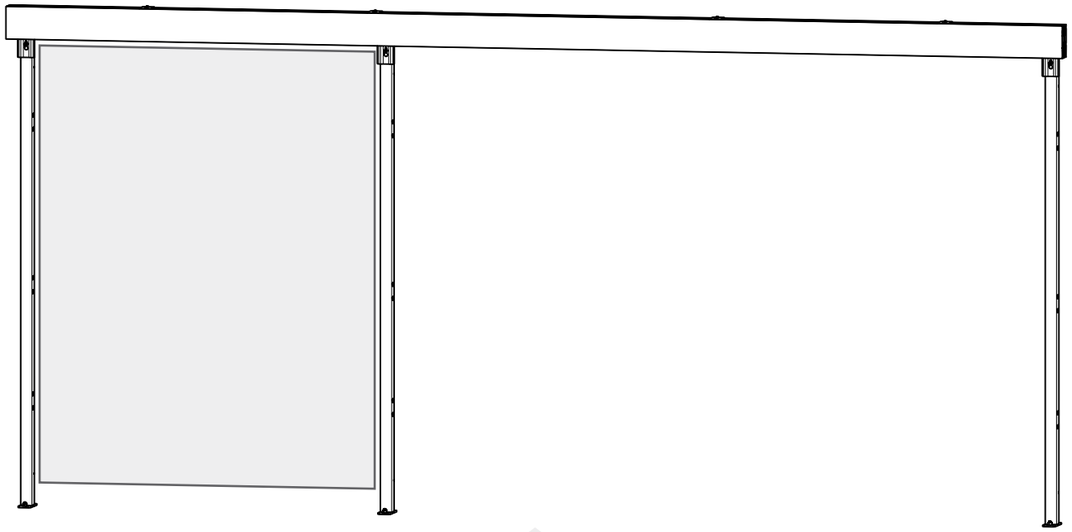

D23-XXX300L, D23-XXX300R

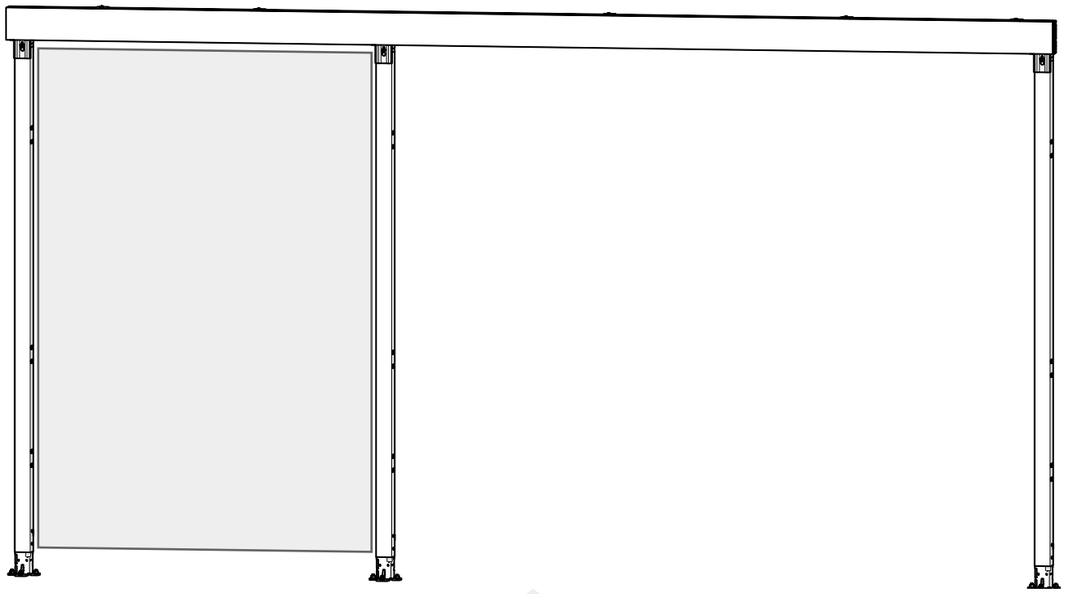

D43-XXX300L, D43-XXX300R

## 1

4mm 13mm

B20-3K

D23-XXX300L/R
D43-XXX300L/R

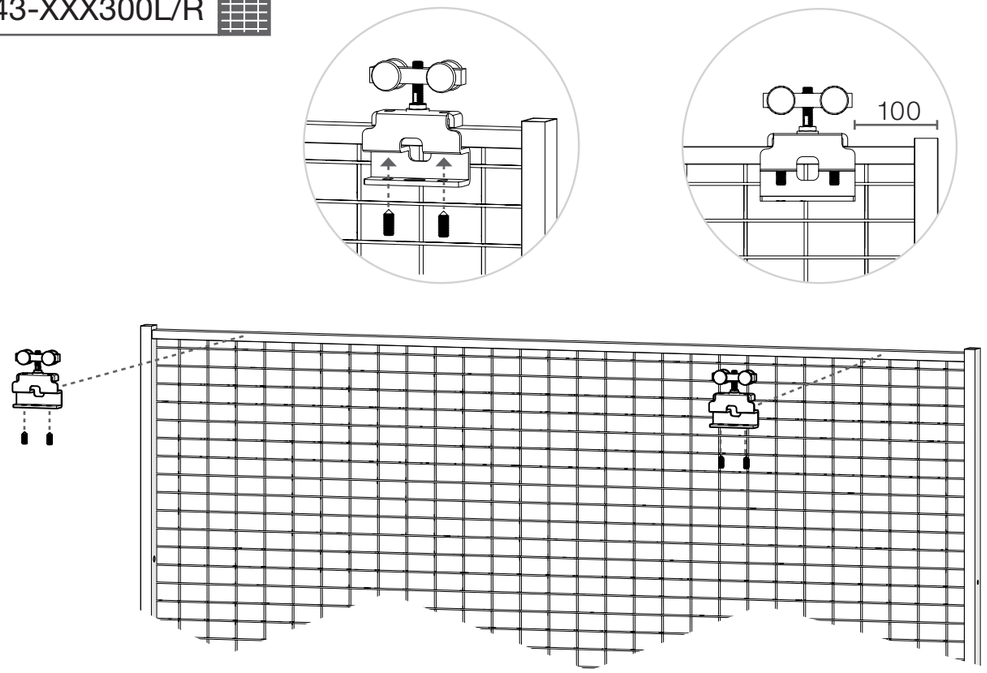


D23-XXX300L/R
D43-XXX300L/R

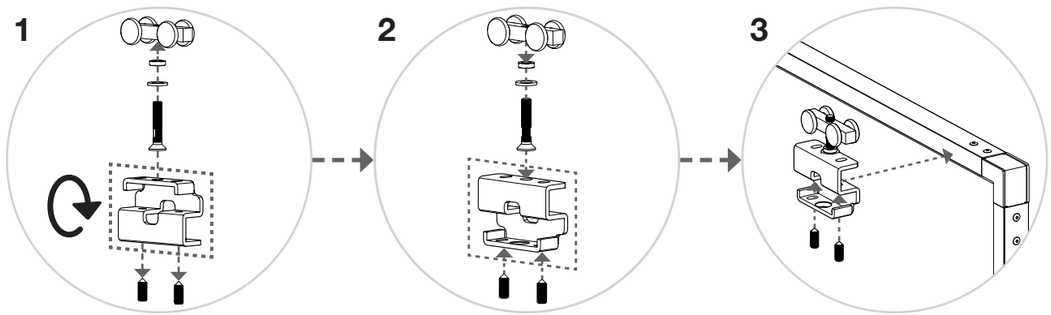


## 2

5mm

B00-077

D23-XXX300L/R
D43-XXX300L/R

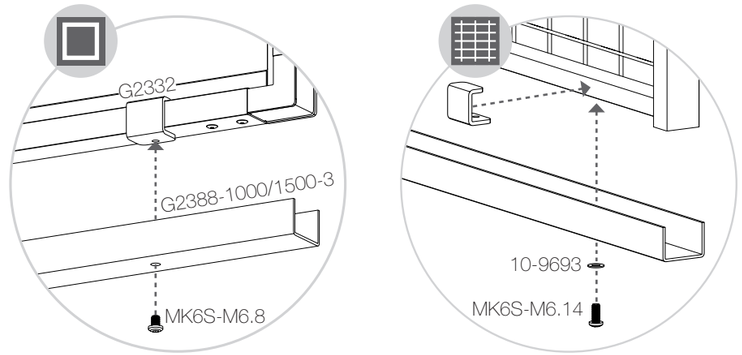


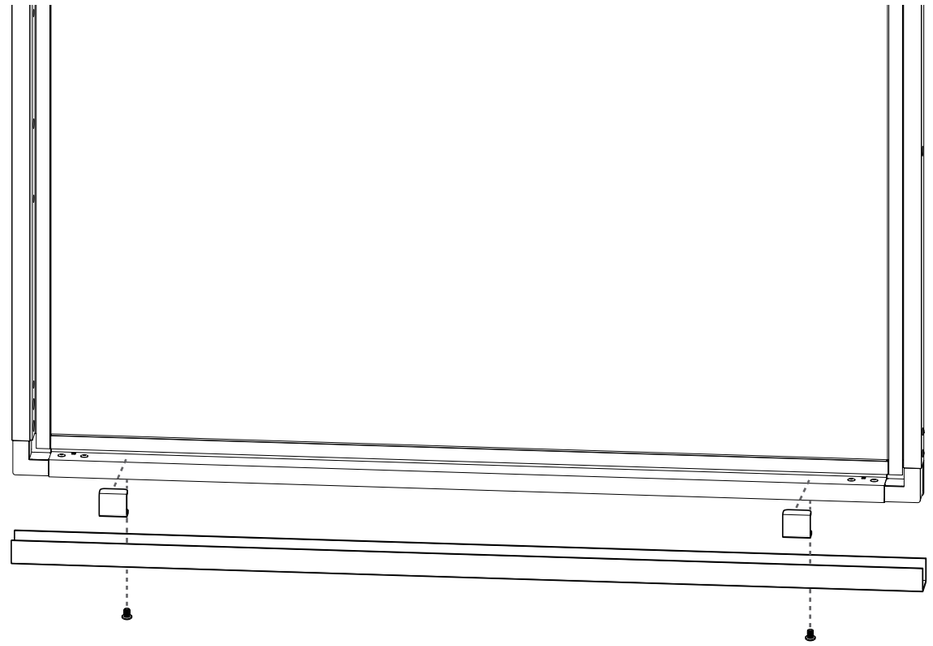

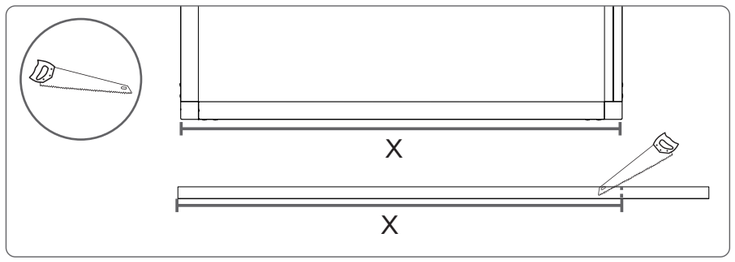

## 3L

D23-XXX300L
D43-XXX300L

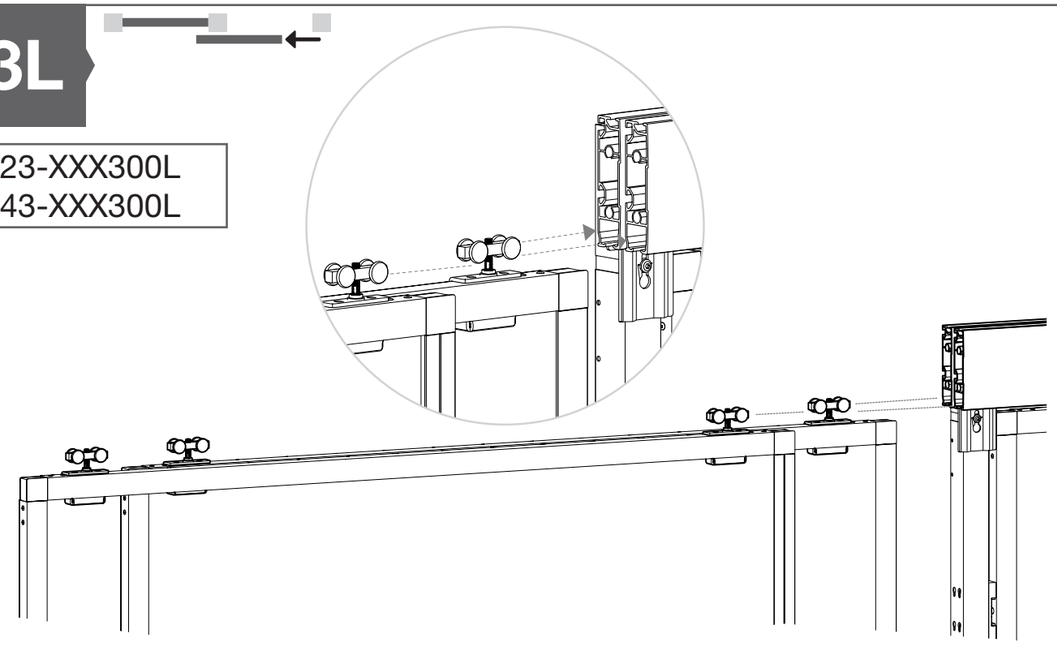

## 4L

5mm

B23-3D

D23-XXX300L
D43-XXX300L

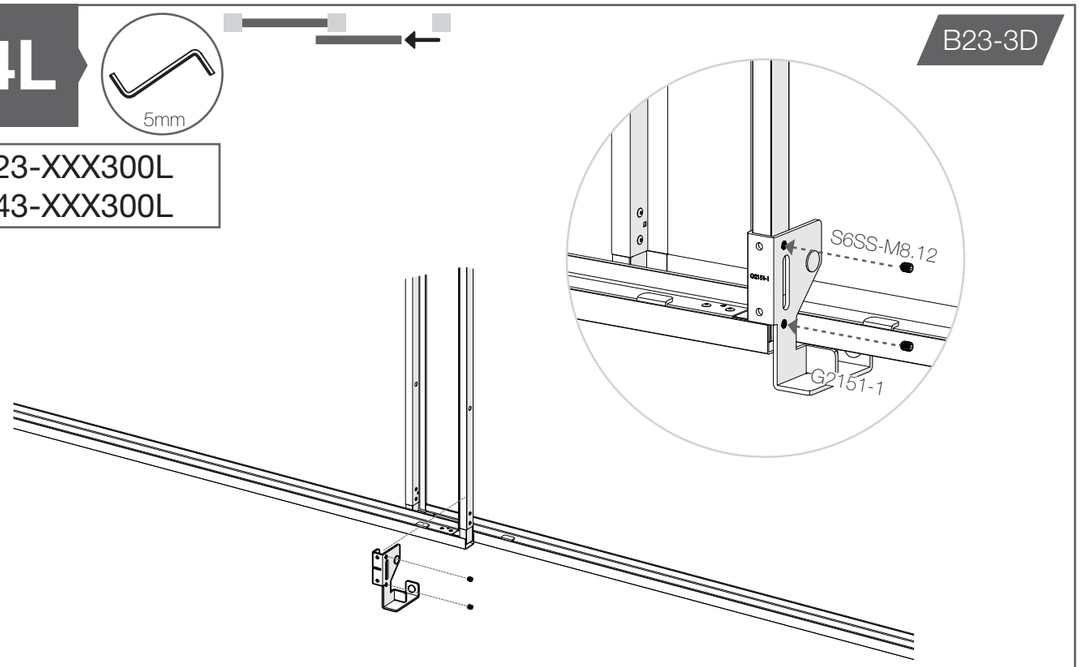


## 3R

D23-XXX300R
D43-XXX300R

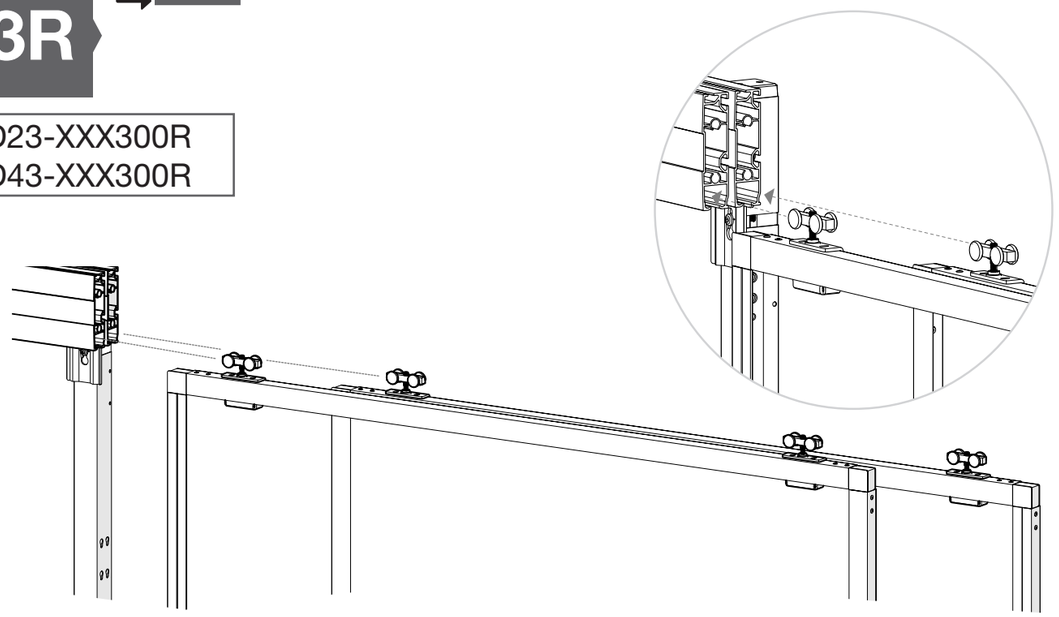

## 4R

5mm

B23-3B

D23-XXX300R
D43-XXX300R

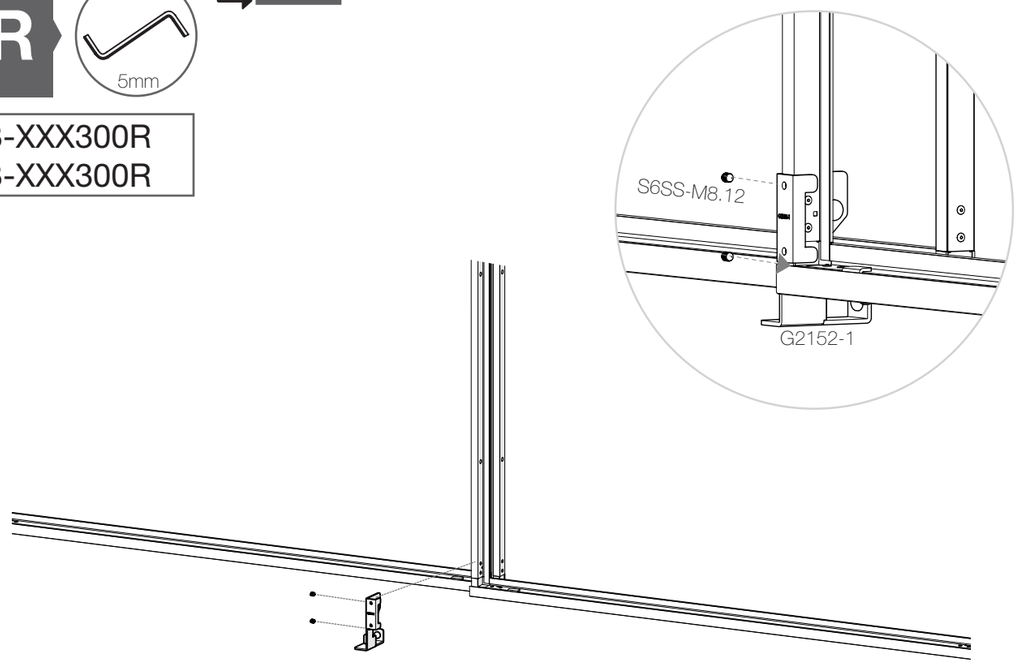

## 5L

D23-XXX300L

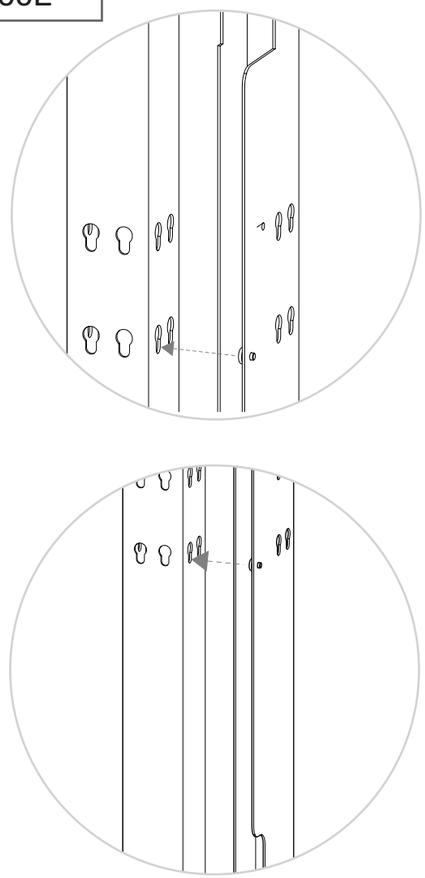

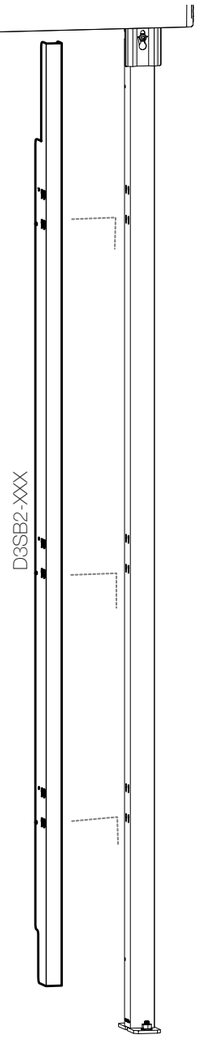


D43-XXX300L

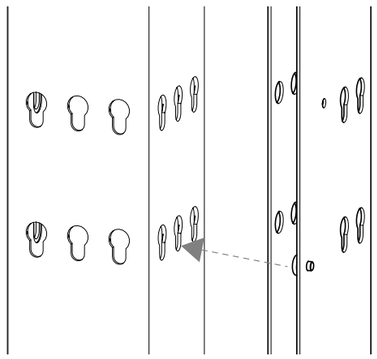

## 5R

D23-XXX300R

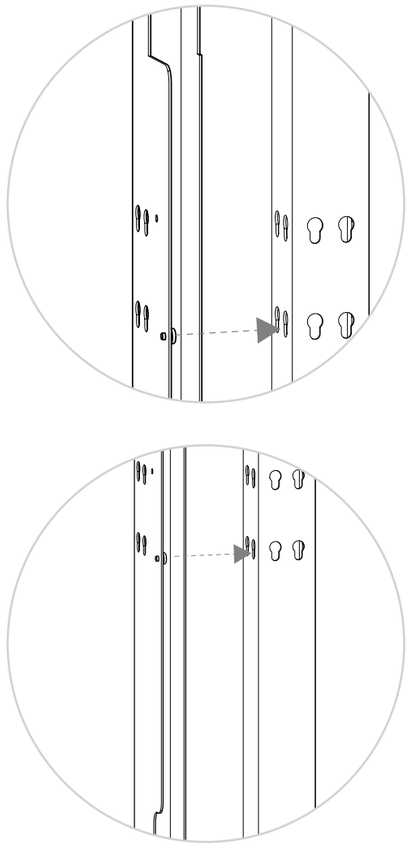

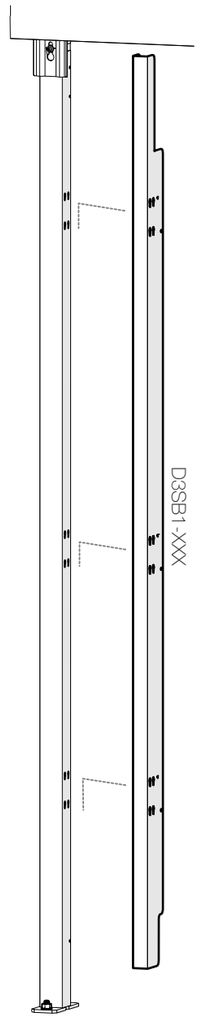


D43-XXX300R

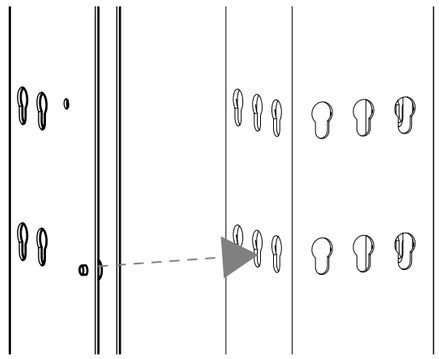

## 6

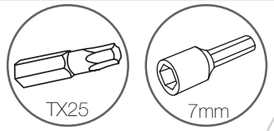


B23-3E

D23-XXX300L/R

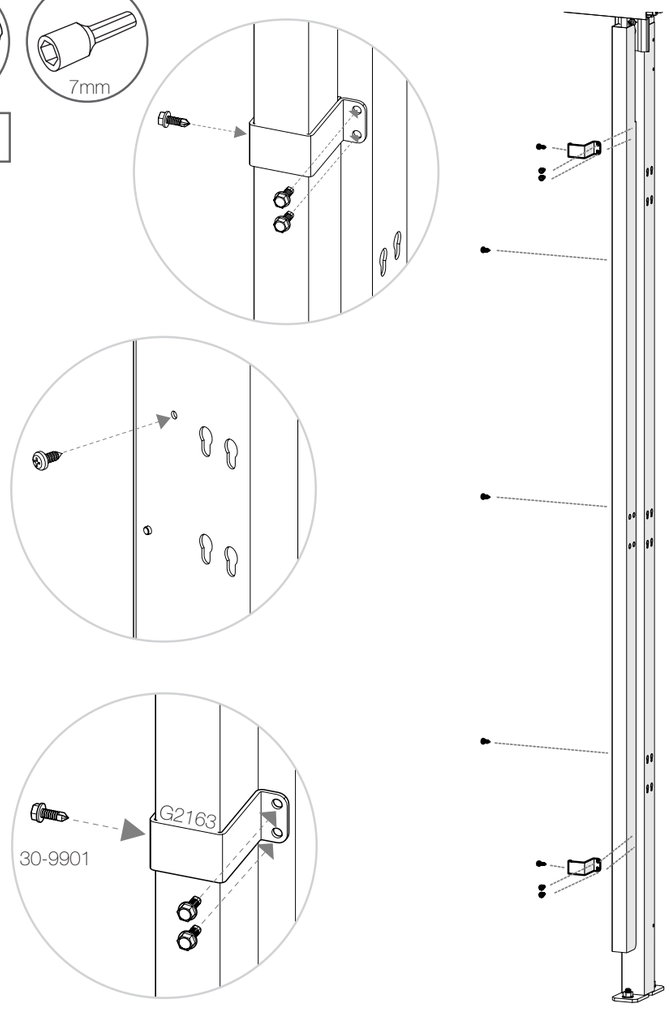


D43-XXX300L/R

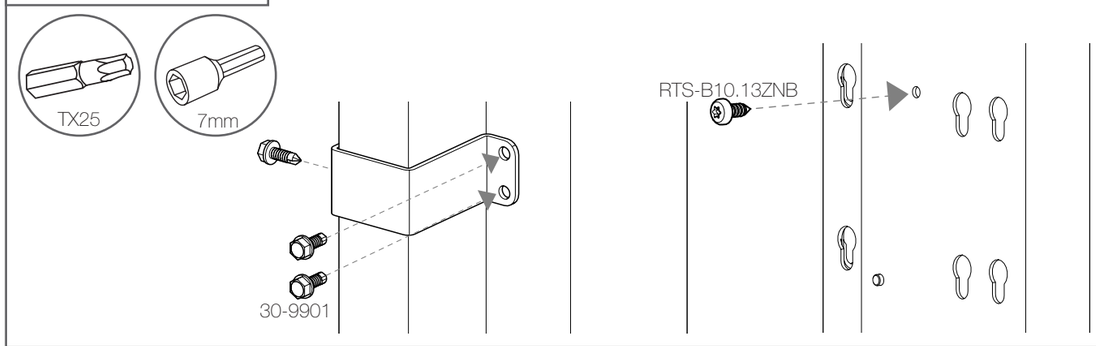


## 7

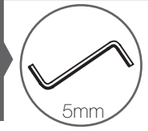


B23-3A

D23-XXX300L/R

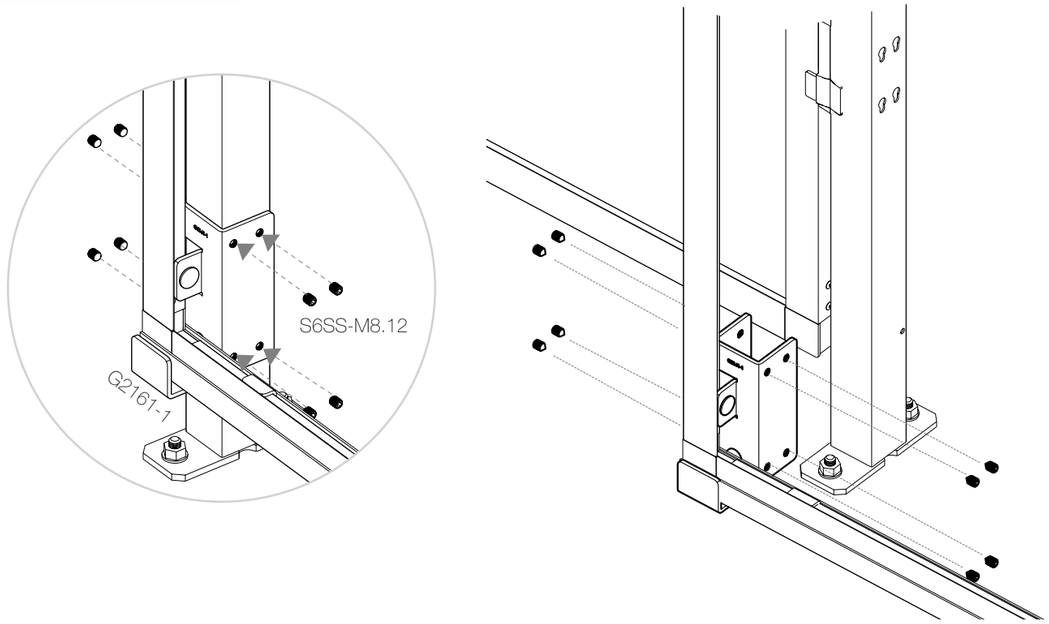


D43-XXX300L/R

B43-4A

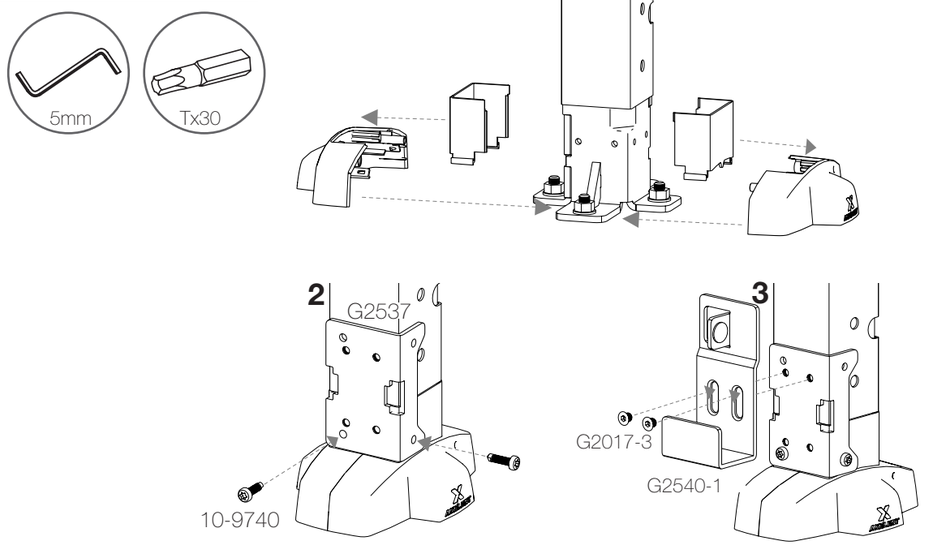

## 8

B24-4C

D23-XXX300L/R

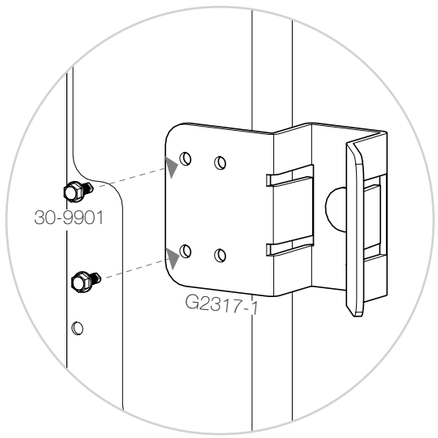


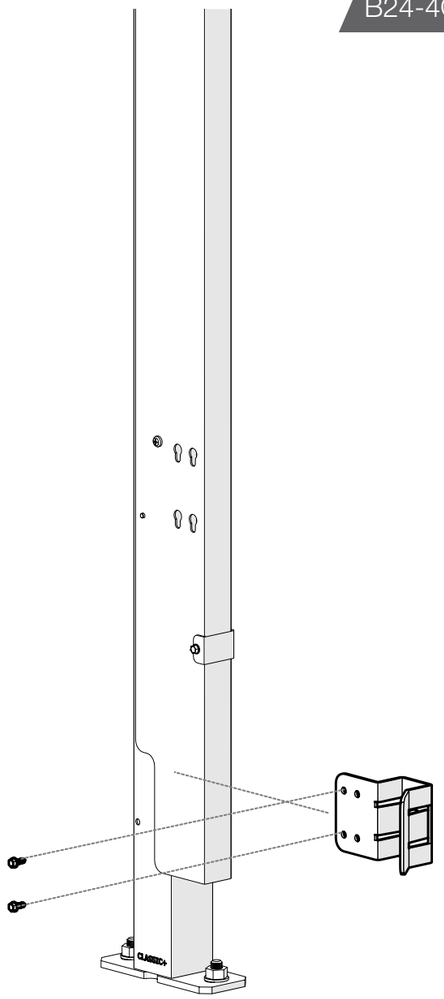

D43-XXX300L/R

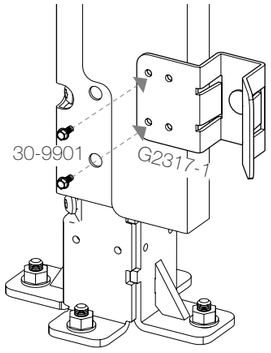


## 9

B20-2S / B24-4C

D23-XXX300L/R
D43-XXX300L/R

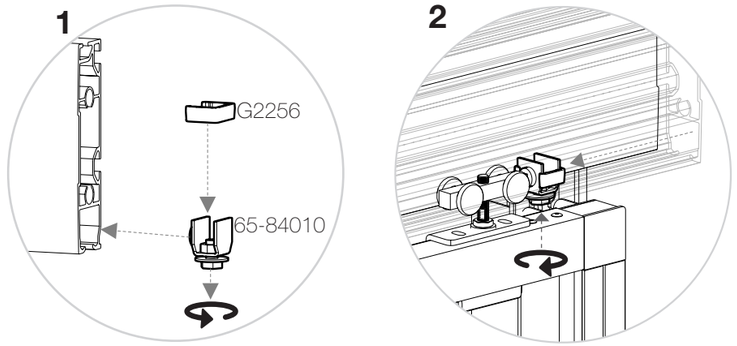


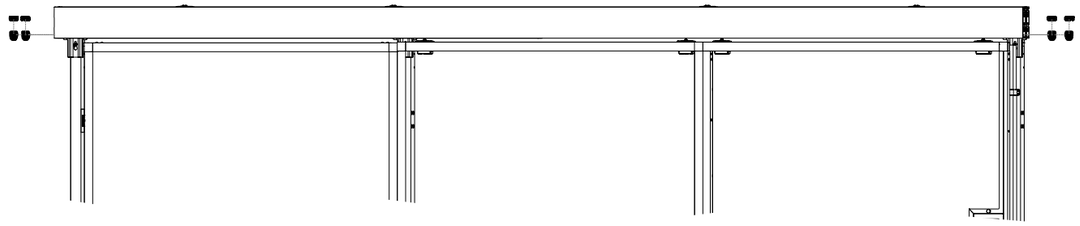

## 10

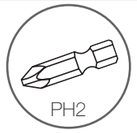


B20-2R

D23-XXX300L/R
D43-XXX300L/R

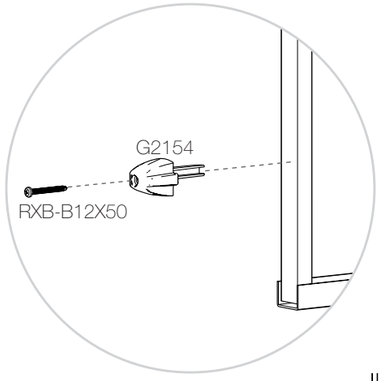


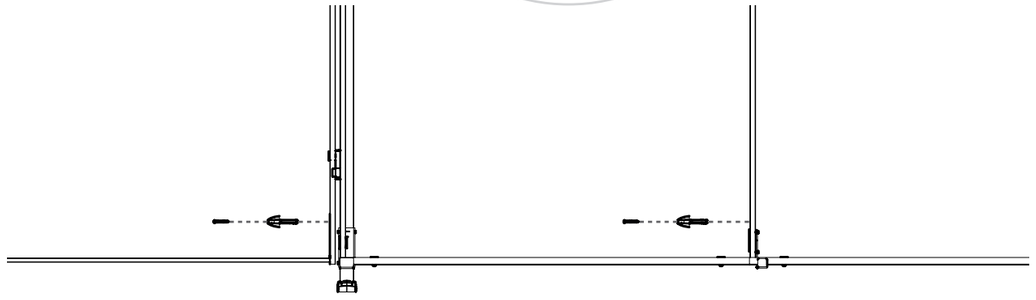

# 11

G2384

D23-XXX300L/R

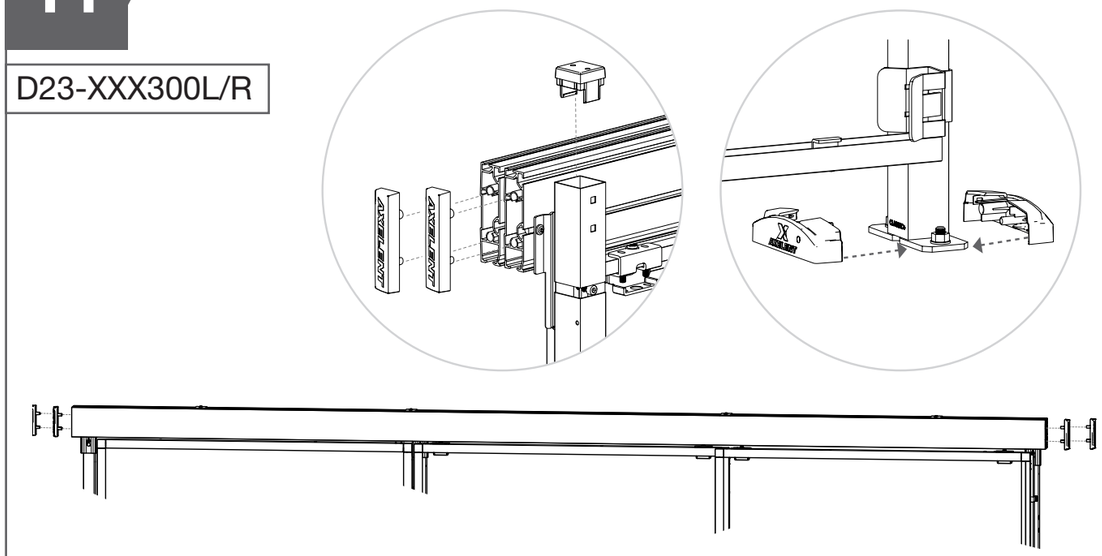

D43-XXX300L/R

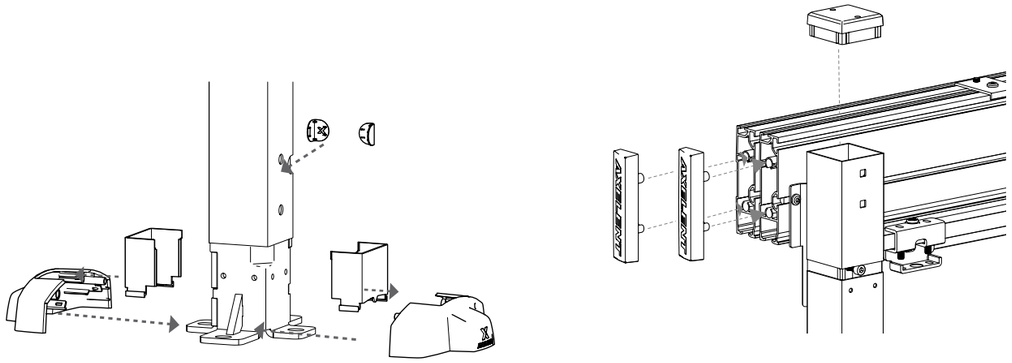

Optional | Metal/plastic panel

T11-3-XXX04 Manual

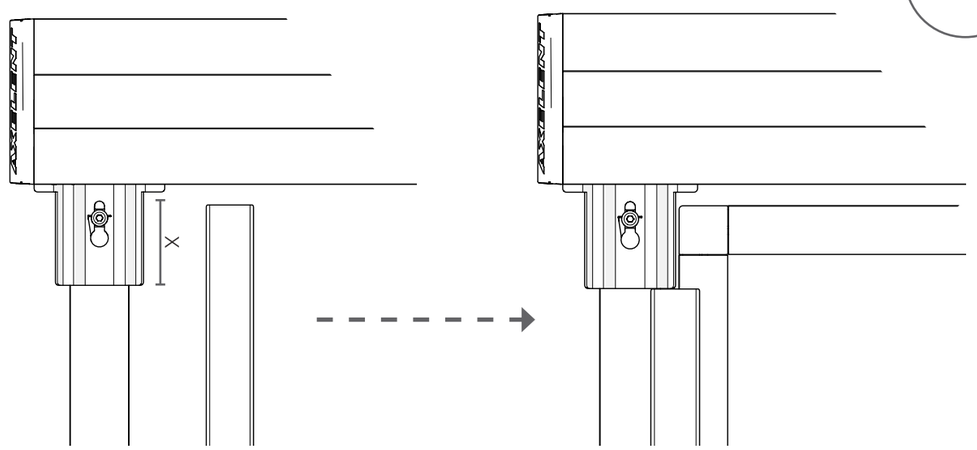


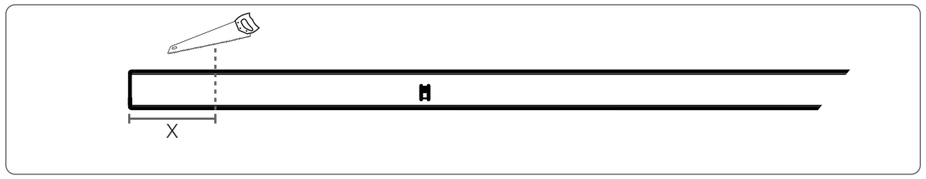


Classic post

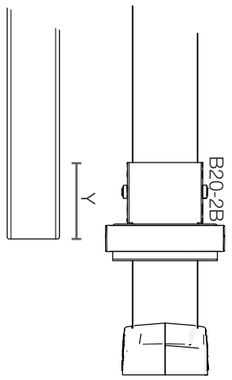


Premium post

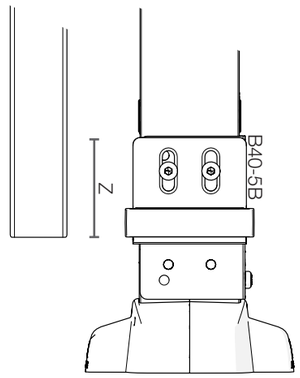


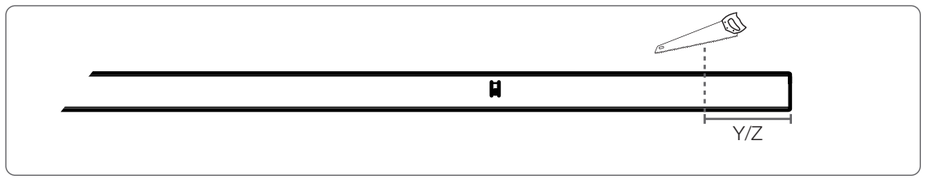

Metal/Plastic panels

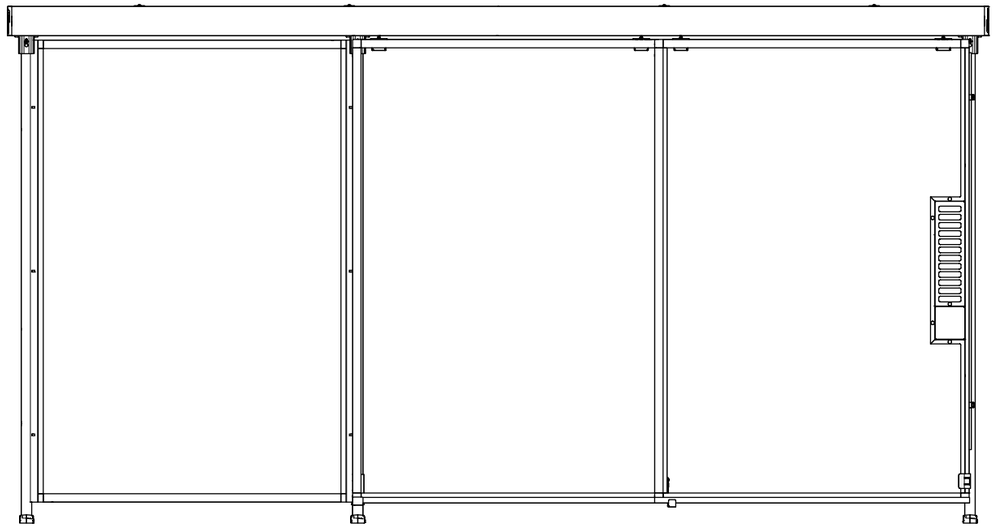

D23-XXX300L

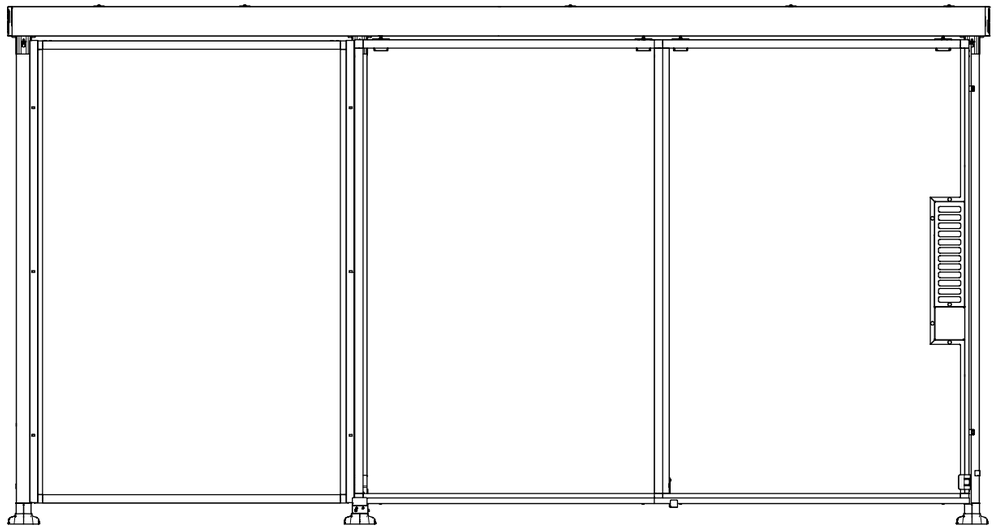

D43-XXX300L

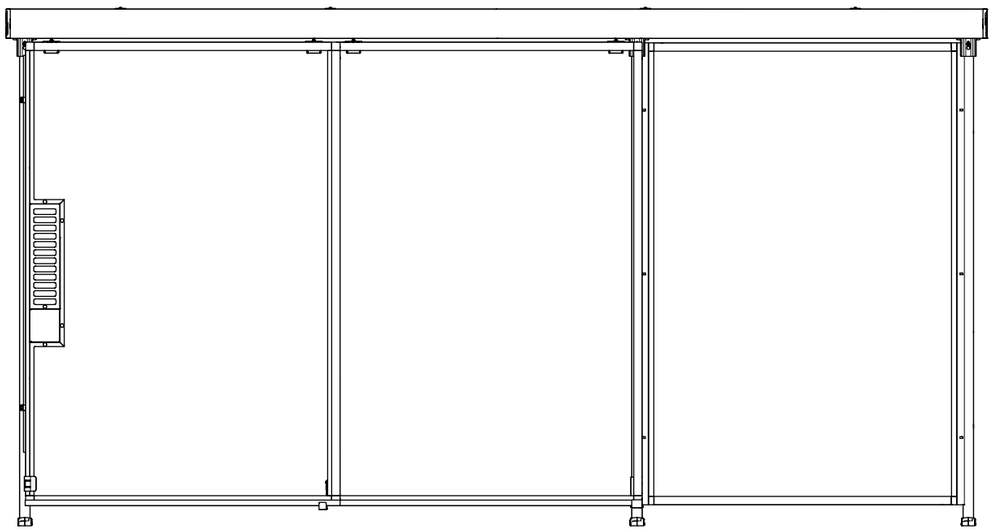

D23-XXX300R

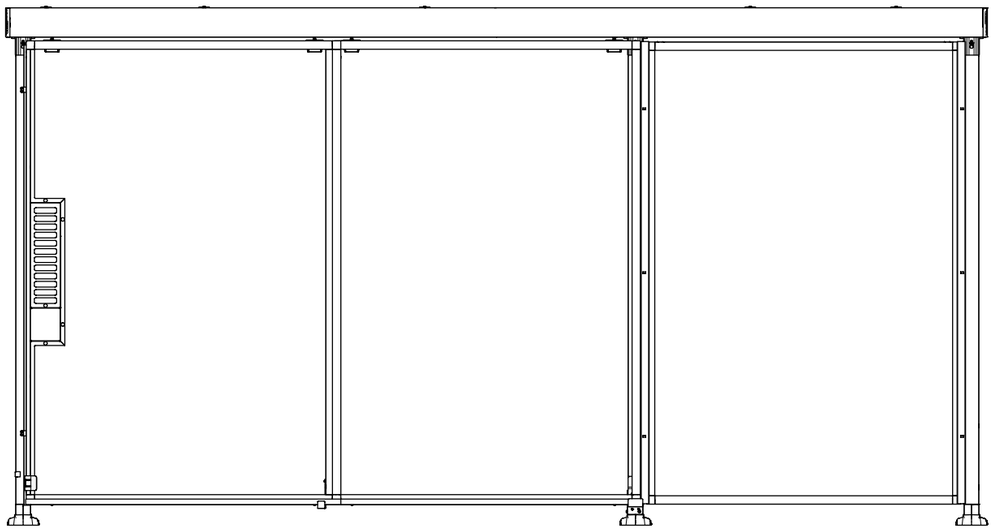

D43-XXX300R

## Mesh panels

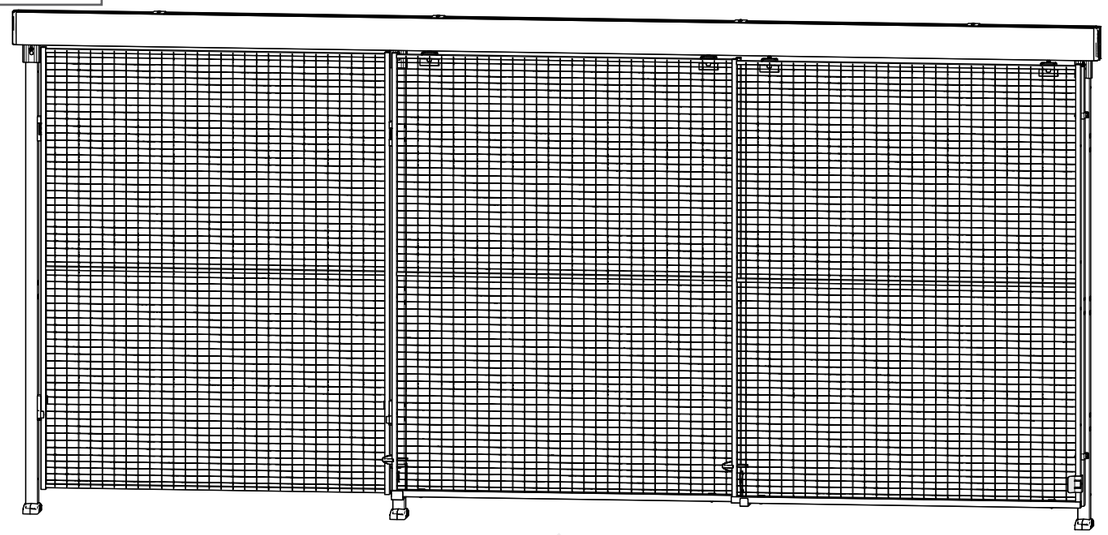

D23-XXX300L

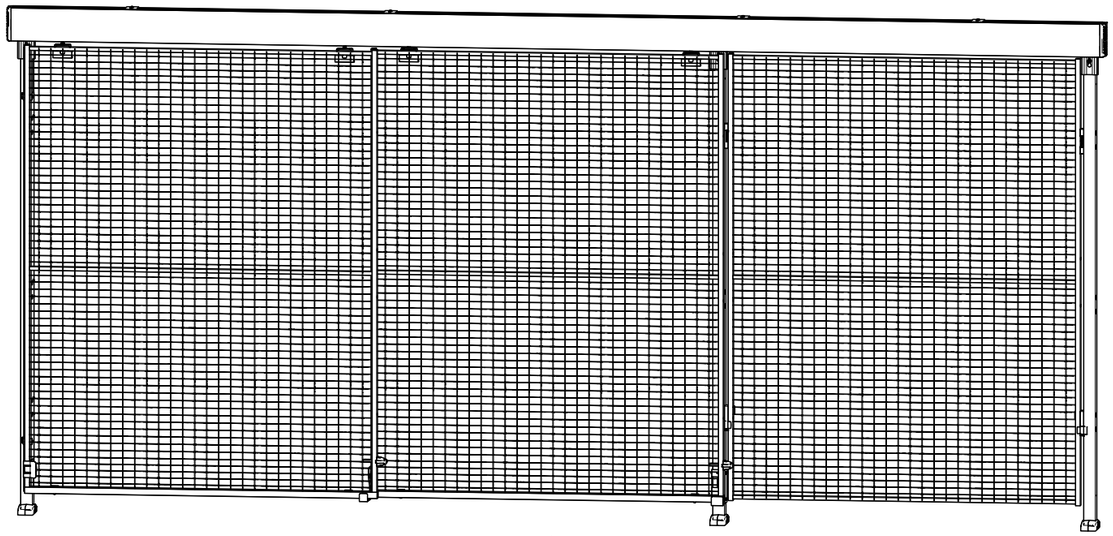

D23-XXX300R

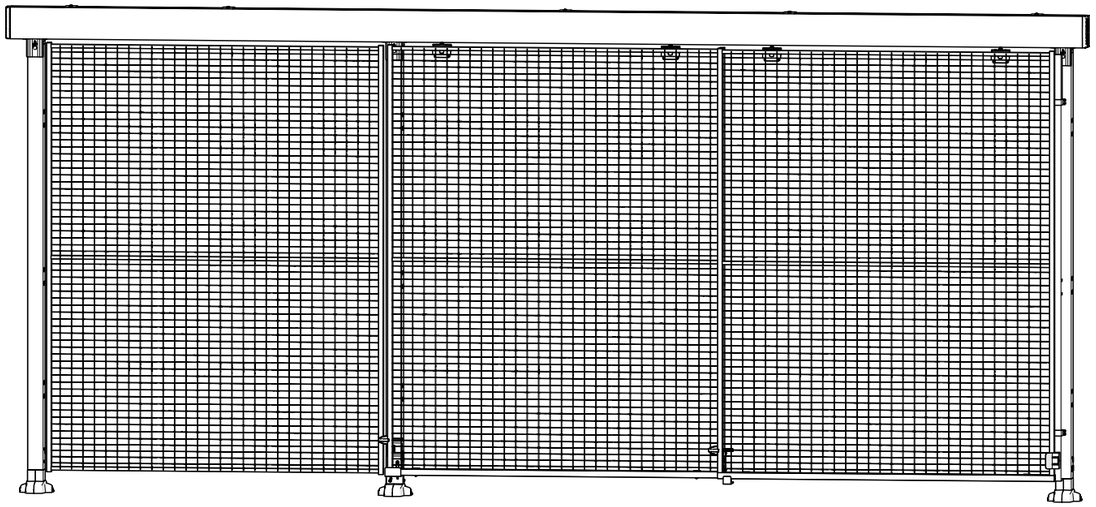

D43-XXX300L

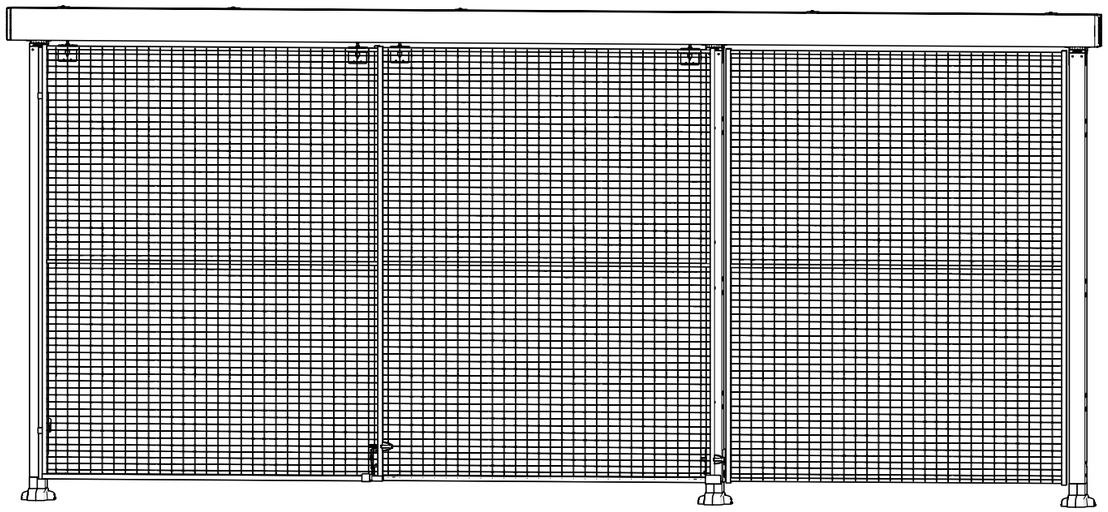

D43-XXX300R

Classic post

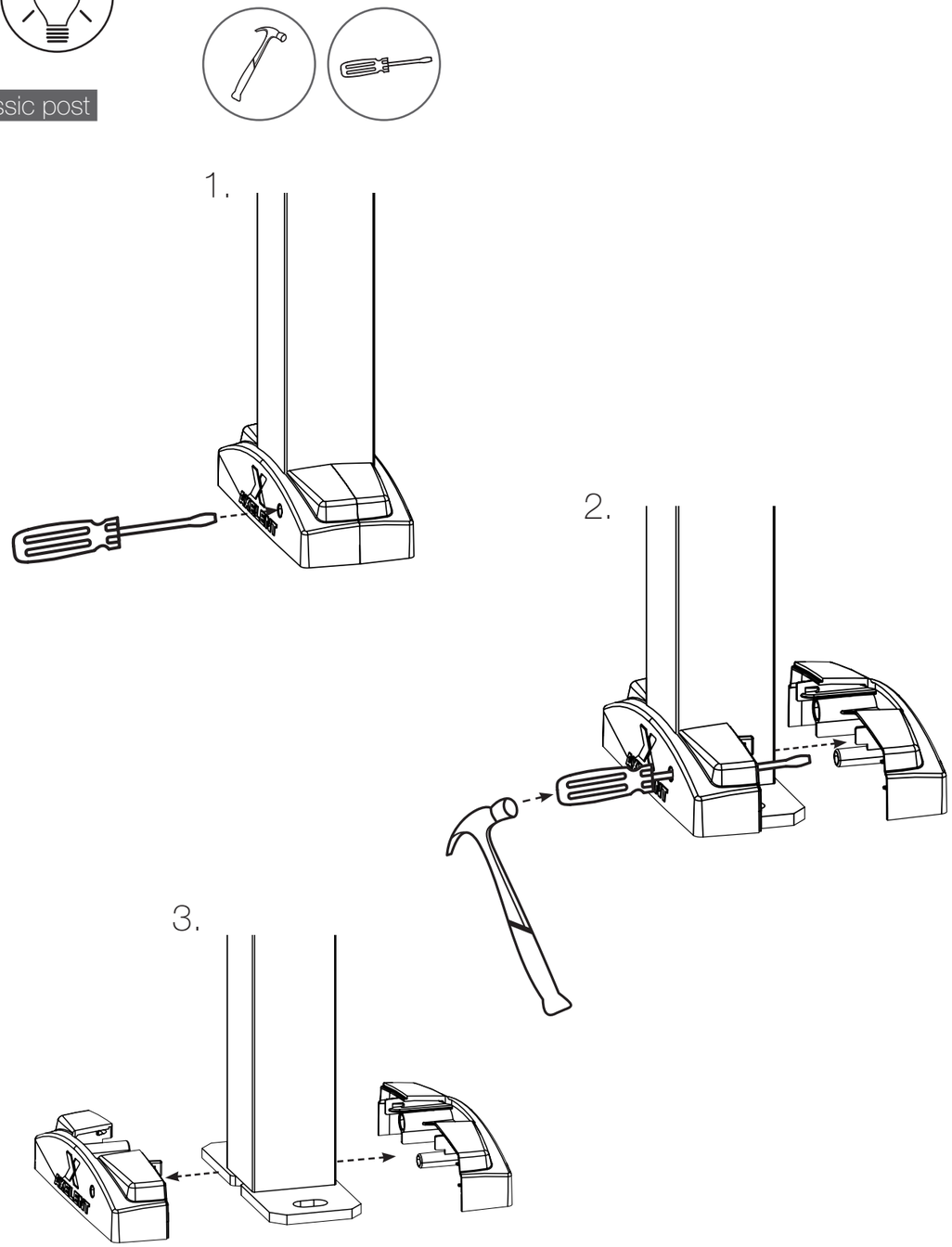

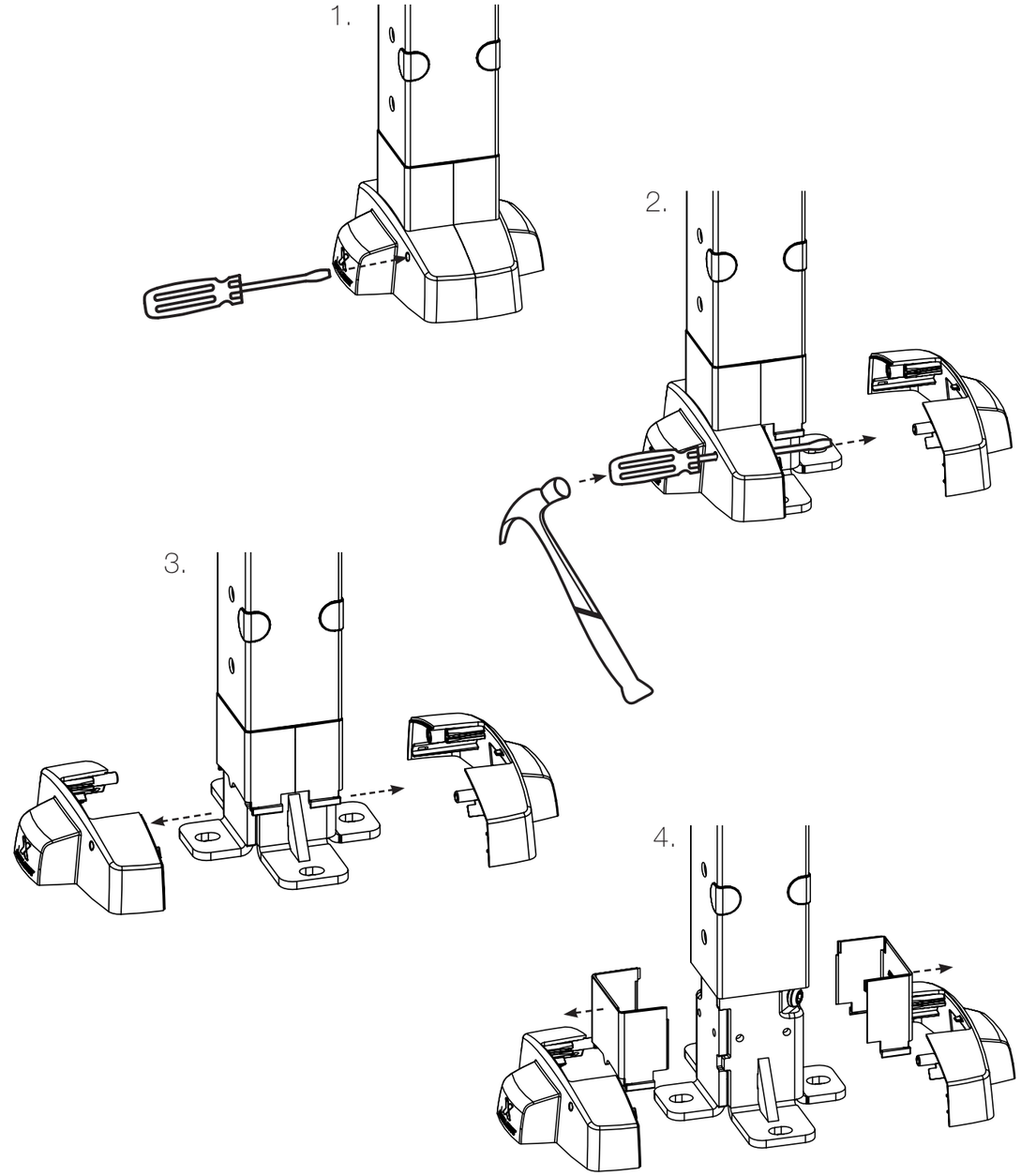
Premium post